BEHAVIORAL SAFETY

INNOVATION NEVER RESTS

LIGATURE RESISTANT SINGLE STATION LAVATORY #ET700

- Ligature-Resistant Design
- ADA, ANSI, TAS and UFAS Compliant
- Constructed of Vandal-Resistant Terreon® Solid Surface Material
- Available in a variety of colors
- Choose Terreon or Terreon®RE
- Mount with Optional Surface Bracket by Bradley or In-Wall Carriers by Others

Specifications

Wall-hung single station fixture is designed to minimize ligature points. The preassembled sprayhead module is equipped with an independent streamformer that is served by an infrared sensing module and solenoid valve (Model HSL1/IRP), or an independent batter IR sensor and battery (Model HSL1/BIR3), TouchTime® electronic mechanical metering push button (HSL1/TTPA0, or TouchTime electronic piezo metering switch (HSL1/TTPB). Standard flow rate of .5 GPM meets industry standards for water conservation, while providing enough water to rinse hands quickly and efficiently. Operating range is 20-80 PSI.

Construction

Bowl and Sprayhead

Constructed of Terreon, a densified solid surface material composed of polyester resin, or TerreonRE, a densified solid surface material composed of a bio-based resin and preconsumer recycled granules. Terreon and TerreonRE are resistant to chemicals, stains, burns and impact. Surface damage can be easily repaired with everyday cleansers or fine grit abrasives. Terreon and TerreonRE are GREENGUARD® certified as low-emitting materials.

Trap Cover Options

Stainless Steel Access Panel

The stainless steel access panel option conceals all plumbing to minimize ligature points. The stainless steel access panel is constructed of 22 gauge type 304 stainless steel with a #4 finish. (4) Ð'-20 tamper proof fasteners and wall anchors are needed (supplied by installer).

High Impact Polymer Access Panel

The high impact polymer access panel offers a softer look with a neutral coal color. This unique design curves to the inside of the front apron to maximize ligature flange, pre-drilled with 6 mounting locations to help seal against wall imperfections. This material is highly resistant to impact, abrasion and corrosion.

Vandal and Ligature Resistance

The molded sprayhead is bolted securely to the lavatory bowl and sits flush to the bowl to minimize ligature points. The Terreon and TerreonRE bowls are resistant to chemicals, stains, burns and impact. Damage is repairable, The chrome plated brass streamformer and activation mechanism are secured to the unit from inside the sprayhead module. The infrared sensor will automatically shut off water flow after 30-45 seconds if a vandal attempts to trigger constant operation. Access panel completely conceals all valves, connections and other optional items underneath the deck.

- ☑ Standard product selections contained within this document are third party **CERTIFIED** to NSF/ANSI 372 meeting the Lead-Free content requirement. Any product configured with custom options will be **COMPLIANT** with NSF/ANSI 372 meeting the Lead—Free content requirement.

- ☑ This plumbing fixture is non-cancelable and non-returnable

Code Compliance and Certifications ANSI Standards

ANSI Standards
Terreon and TerreonRE are certified by Home Innovation Lab to meet CSA B45.5/IAPMOZ124.

cUPc Approval
SafeCare Single Laboratory Systems are Uniform Plumbing Code (UPC). International Plumbing Code (IPC) and National Plumbing Code of Canada(NPC) approved through the International Association of Plumbing and Mechanical Officials (IAPMO). Manufactured in compliance with IGC 156, CSA B45 Series (R08) 8 & ASME A112.18.1/ CSA B125.1.

- ☑ This plumbing fixture is designed for hand washing only. It is not intended to dispense water for human consumption through drinking or for preparation of food or beverages.

Mounting

The HSL1 is designed to mount at different heights (adult and children) to comply with guidelines on reaches, clearances and operation for various codes, including ADA Accessibility Guidelines for Buildings and Facilities (ADAAG). Always check your local and state codes. The HSL1 can be supported by a surface-mounted bracket supplied by Bradley or in-wall carriers supplied by others. The surface-mounted bracket is constructed of 1' square structural tubing and is zinc-plated mild steel. The surface-mounted bracket also includes a locking device and leveling screws.

Standard Equipment

Ligature resistant, individual bowl and sprayhead with 120VAC/12VDC plug-in adapter (Model HSL1/BIR3, Model HSL1/TTPA and Model HSL1/TTPB). Battery included in HSL1/BIR3 only. The following fittings are provided: p-trap. grid strainer and tailpiece, flexible stainless steel supply connections and Navigator thermostatic mixing valve with stops.

Activation Types

Adaptive Infrared

The streamformer is controlled by a slow-closing solenoid valve. Hands placed within the bowl are detected by an infrared sensor module, which activates a flow of tempered water to the streamformer. Shut-off is automatic after hands are removed from the detection area. The infrared sensor uses a conical shaped transmitting beam. having a detection area adapted to, but not exceeding, the bowl perimeter, The detection area projects forward 15" to each side and 15-degrees below horizontal. The infrared sensor automatically adapts to the bowl after power is turned on. The infrared sensor is not affected by varying color tones or darkness, Direct sunlight or bright washroom lights will not activate the system. Includes solenoid valve and a low voltage plug-in adapter as standard equipment.

- Solenoid - 12VDC, 3/8" NPT. Few moving parts, and resistant to most chemicals, minerals, and impurities often present in municipal water supplies.
- Low Voltage Plug-in Adapter - UL/CSA listed, 120VAC/12V plug-in adapter. Plugs into a standard GFCI protected electrical outlet.

Battery Infrared

The battery-powered sensor uses a zone-focused infrared transmitting beam, creating a large detection area not exceeding the bowl perimeter. The sensor is not affected by varying skin tones or darkness. When hands enter the detection area, the sensor starts water flow by opening the valve electronically. When hands leave the detection area, the sensor stops the flow of water by closing the electronically activated solenoid valve. The 6-volt DC, electronically activated solenoid valve has few moving parts providing reliable operation which is unaffected by most chemicals and minerals often present in municipal water supplies. The station is powered by a single lithium battery. Battery type is Duracell® DL 223A 6-volt lithium or equivalent (batteries included) with a life expectancy of 4-5 years or approximately 200,000 cycles.

TouchTime Metering

Each low voltage mechanical metering push button (TTPA) or piezo metering switch (TTPB) actuates a non-hold-open, slow closing anti-hamrner solenoid valve that is timed from an electronic potted assembly, Each pushbutlon activates one valve, which, in turn, activates one station (streamtormer). TouchTime controls water flow at each station through the use of solid-state, digital circuitry. Timing is factory set at a 15 second run time, but is held adjustable. Mechanical metering push button and piezo metering switch are located on the top of the sprayhead.

Flow Control Rate

Operating range 20-80 psi. Flow restrictor keeps flow rate constant at all pressures. Flow rate: 0.5 GPM.

Standard Selections (Must select one from each category)

Activation Type

- ☐ **IRP** Adaptive Infrared
- ☐ **BIR3** Battery Infrared
- ☐ **TTPA** TouchTime Mechanical Metering
- ☐ **TTPB** TouchTime Piezo Metering Switch

Water Supply Type (select one)

- ☐ **TMA** Navigator Thermostatic Mixing Valve (Hot and Cold Supplies)
- ☐ **TL** Single Tempered Line

Color of Terreon Bowl/Sprayhead Cover (select one)

Standard Colors

- ☐ **CHAR** Charcoal Gray
- ☐ **COBBLE** Cobblestone
- ☐ **DRIFT** Driftwood†
- ☐ **DUNE** Sand Dune†
- ☐ **E-GRAY** Empire Gray
- ☐ **GRAPH** Graphite
- ☐ **LANNON** Lannonstone
- ☐ **LONDON** London Gray
- ☐ **MOONSTONE** Moonstone†
- ☐ **O-TAUPE** Organic Taupe
- ☐ **PEBBLE** Pebble Beach
- ☐ **PEP-WHT** Peppered White
- ☐ **SAND** Sandtrap
- ☐ **S-CREEK** Stone Creek
- ☐ **S-MIST** Silver Mist
- ☐ **WHT-SAND** White Sand

Designer Colors (available at an additional charge)*

- ☐ **ARC-CHIP** Arctic Chip
- ☐ **COFFEE** Coffee Bean
- ☐ **RIVER** Riverstone

TerreonRE Colors (available at an additional charge)*

- ☐ **BIRCH-BARK** Birch Bark
- ☐ **DUSK** Dusk
- ☐ **MOONDUST** Moon Dust
- ☐ **OAT** Oat

Access Panel Type (select one)

- ☐ **STEEL** Stainless Steel Access Panel
- ☐ **COAL** Coal High Impact Polymer Access Panel (only available with BRKT mounting option)

Mounting Type

- ☐ **BRKT** Surface-Mounted Bracket
- ☐ **NONE** Customer-Supplied Carrier

Waste Assembly Type

- ☐ **S-CHROME** Single Chrome-Plated P-Trap

* Non-cancelable, not-returnable

† This color contains large, randomly distributed chips.

HSL1—Dimensions

Top View

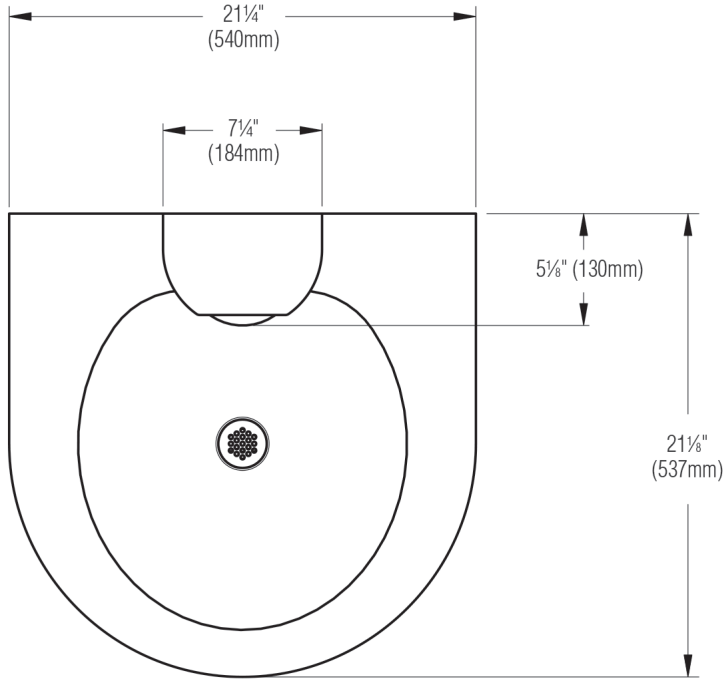

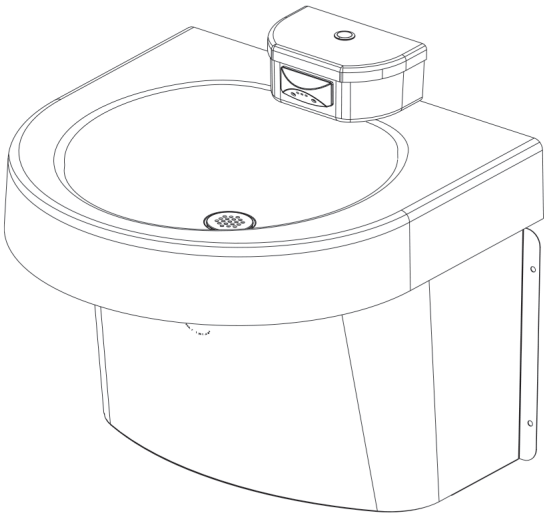

Representative of HSL1 with TouchTime activation.
Dimensions shown apply to all activations.

Front View

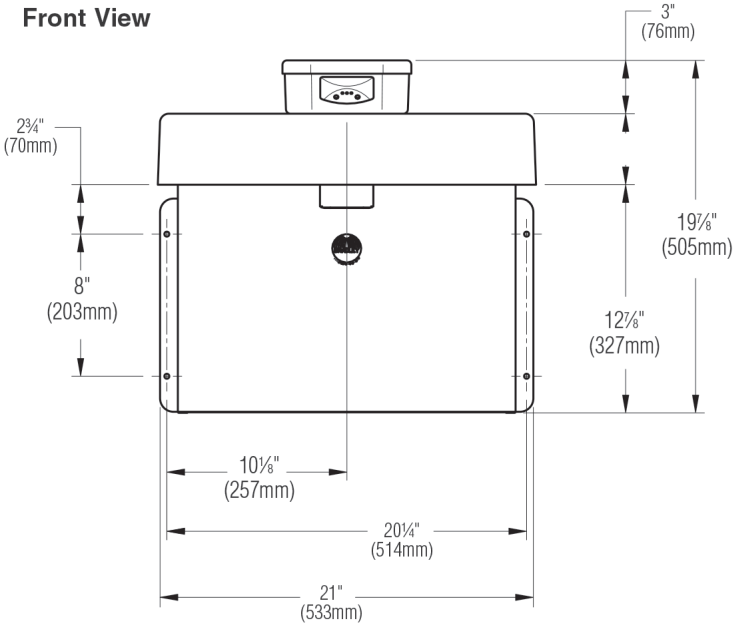

HSL1 with Optional Stainless Steel Access Panel

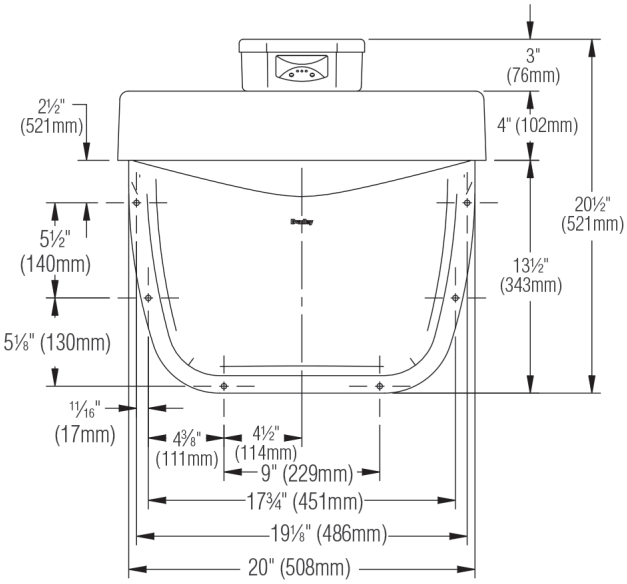

HSL1 with Optional Polymer Access Panel

HSL1—Dimensions

Side View - Stainless Steel Access Panel

Standard Height

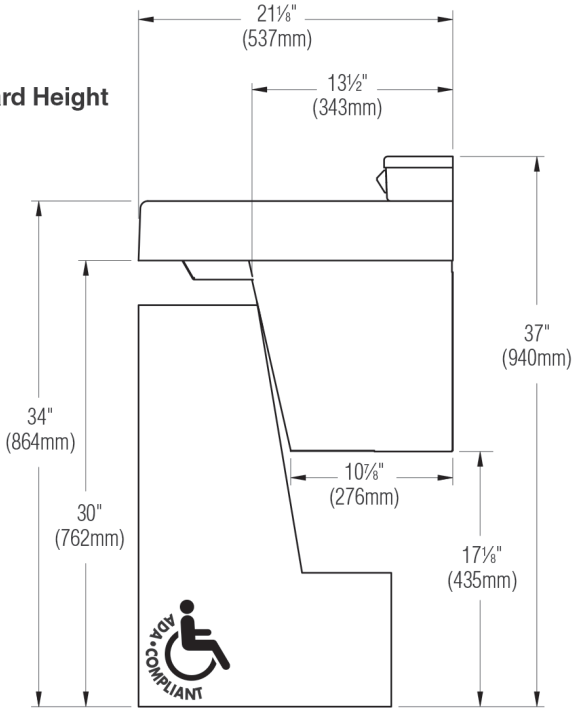

Side View - Polymer Access Panel

Standard Height

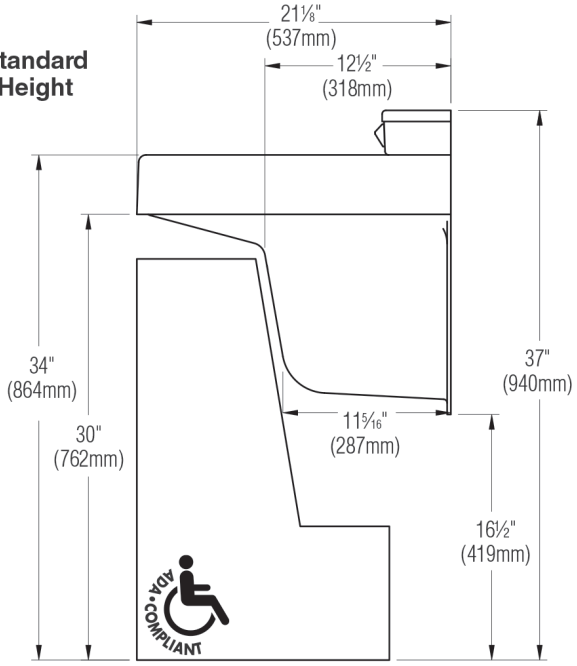

Juvenile Height: Ages 6 through 12

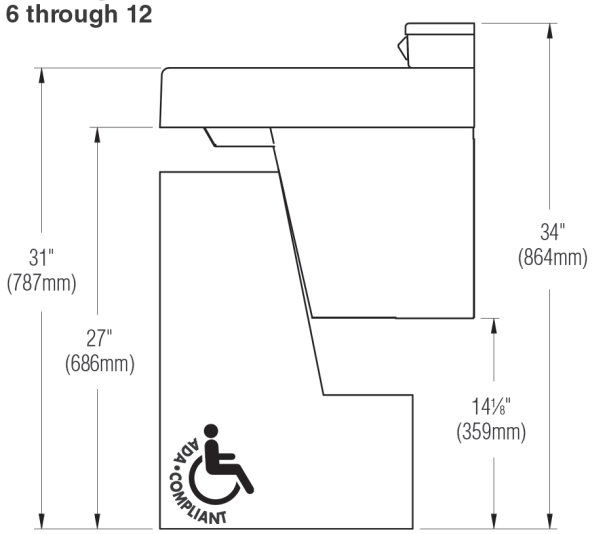

Juvenile Height: Ages 6 through 12

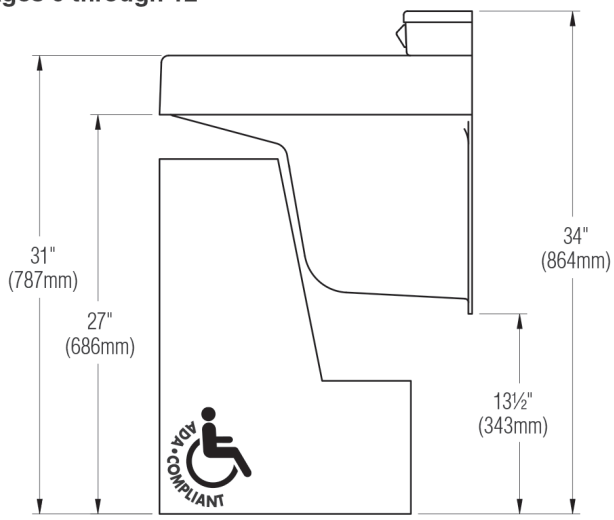

HSL1—Rough-In (All Activations)

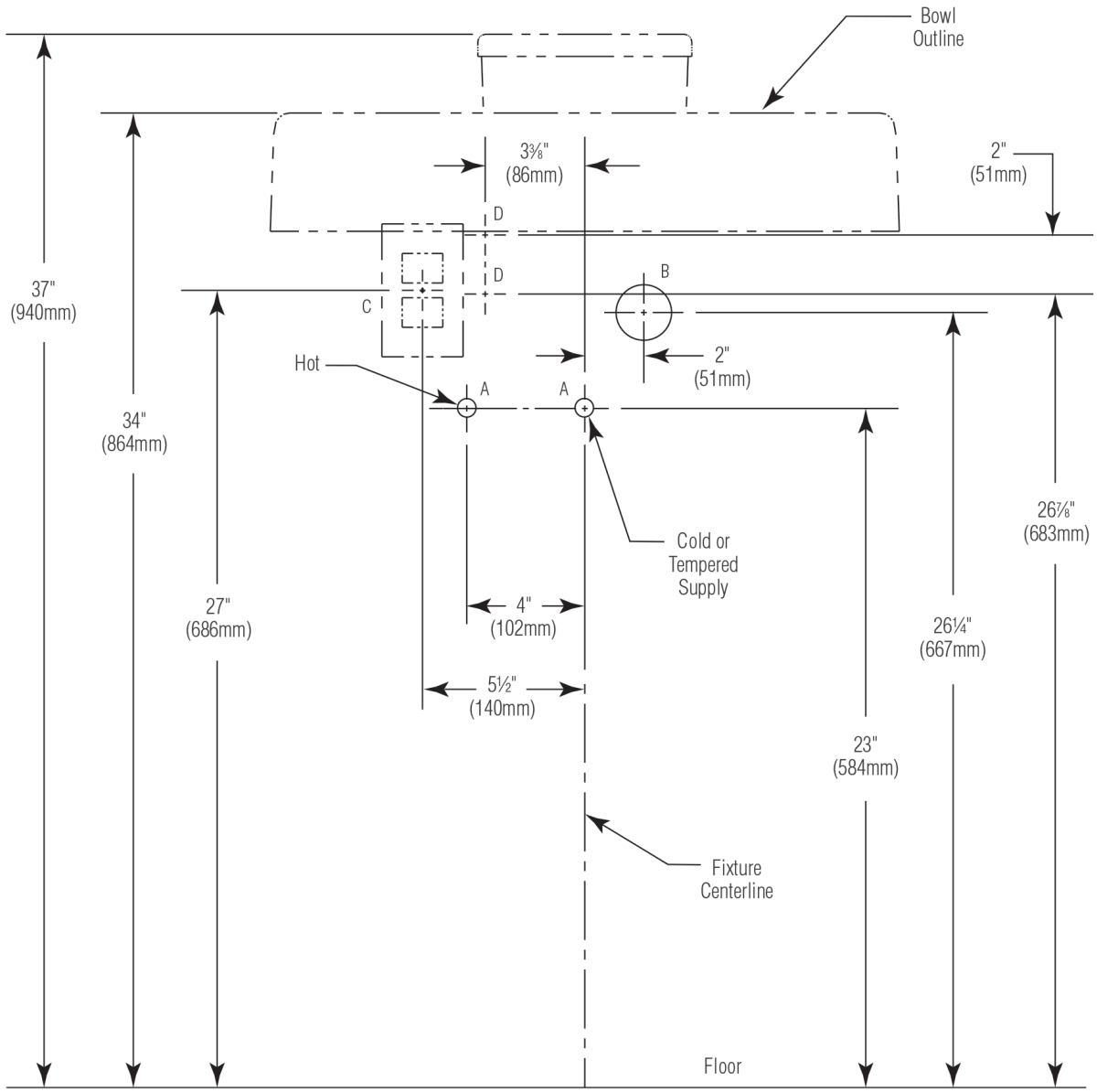

Chart 1

Rim Height	Vertical Height Adjustments A-E	Fixture Style
34”	None	Standard Height
31”	Subtract 3”	Juvenile Height

Chart 2

Code	Description	Qty.
A	1/2” Nominal Copper Tubing for Hot/ Cold Supplies, Stub-Out 2” from Wall	2
B	1 1/2” NPT Drain, Stub-Out 2” from Wall	1
C	110V GFCI Protected Electrical Outlet. Infrared and TouchTime Only	1
D	#10 Fasteners/Wall Anchors, Optional	2