BEHAVIORAL SAFETY PRODUCTS

Combining Experience with Technology

Suicide Resistant Safehouse Nightstand

#BF960

Overview

Residential room furnishing designed and engineered specifically for critical environments. Safehouse Chests feature Dura-Ply™ construction and built-in safety features like rounded edges and SafeJoint™ concealed joinery for added strength with exposed fasteners limited to the back of the unit.

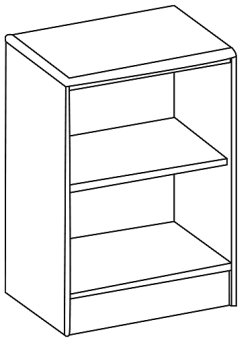

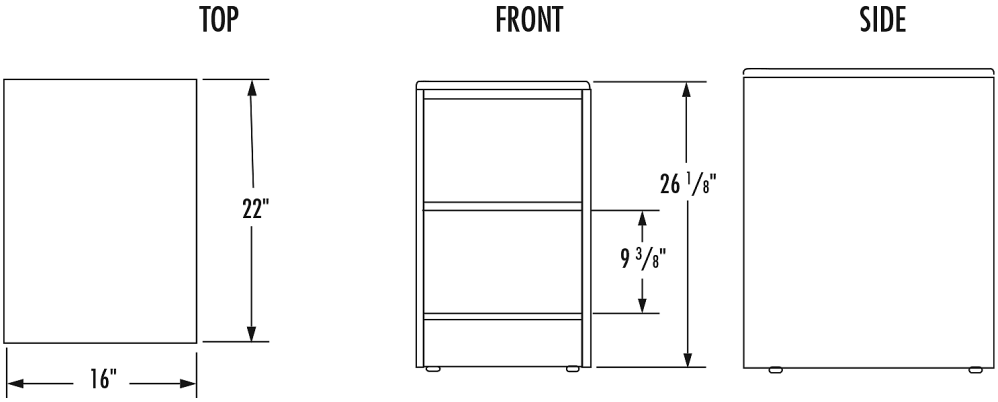

Fabrication and Material

Nightstand 3/4'' plywood with natural hardwood veneer and impact resistant PVC edge bonding securely doweled and glued at strategic locations. The high-pressure laminate top surface with rounded solid hardwood edge for enhanced wear resistance and cleanability is supported with a double top for additional durability. Sturdy 3/4'' plywood back is securely fastened to unit for additional structural integrity. Open shelf design for enhanced safety and security provides roomy built-in storage compartments. Shelf is structurally reinforced with SafeJoint™ concealed joinery for added strength. Non-removeable, non-mar floor glides are standard. Made in the U.S.A.

Finish

Catalyzed vinyl sealer coat plus catalyzed varnish top coat for wear resistance.

Color: Oak, Cherry

Weight: 50.5 lbs.

Assembly: Ships assembled.

Installation

None required for standard use. See installation Instructions for detailed bolt down method.

Warranty

5-year limited replacement warranty for defects in material or workmanship. Wood is a natural material subject to unique variations. Behavioral Safety Products does not warranty the matching of color, grain or texture.

Maintenance

Recommend using Norix Cleaning Solutions, specifically formulated for extended care of Norix products. Norix Cleaning Solutions' Wood Cleaner and Polish.

Filing System

12600 Institutional Furniture